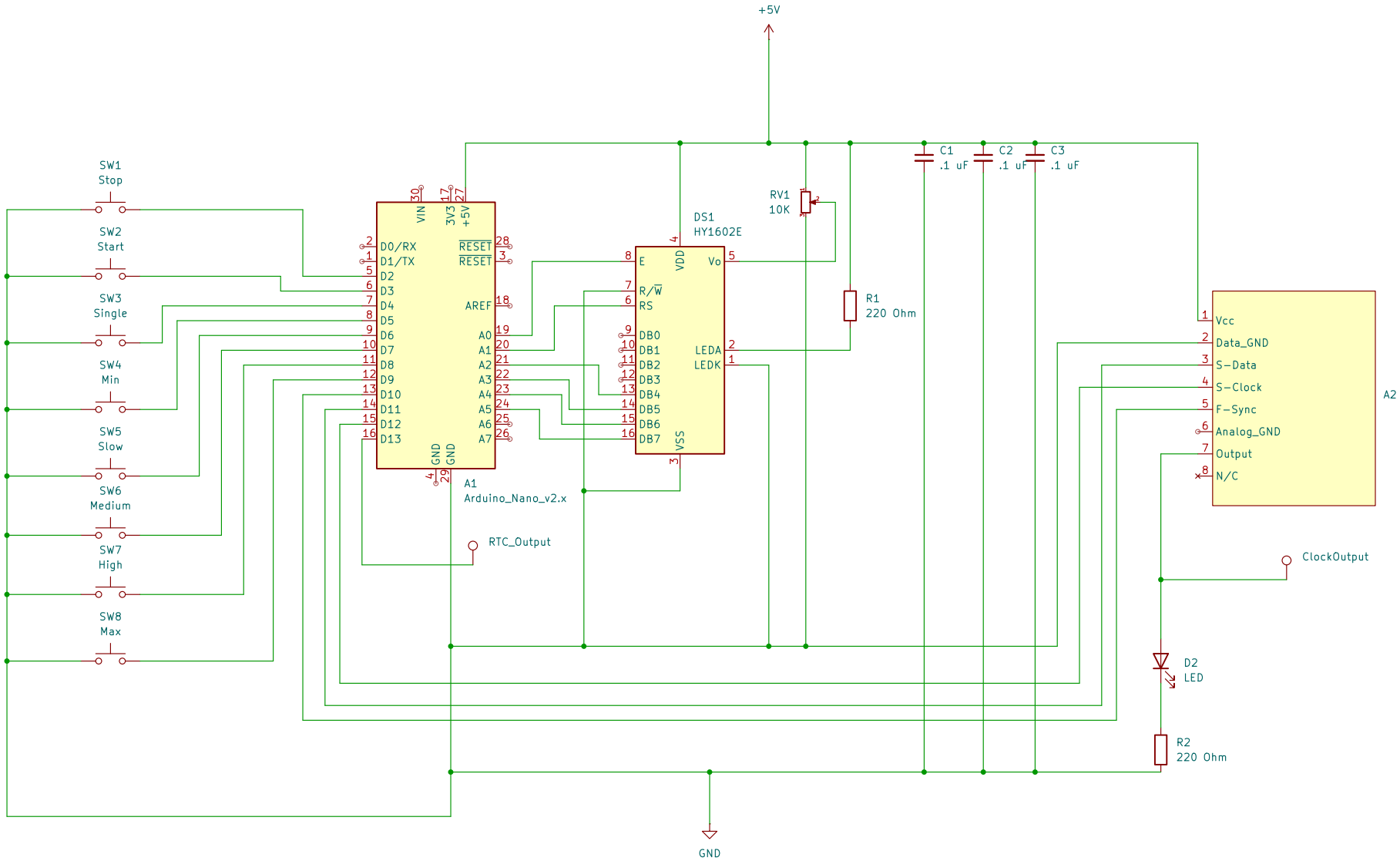

NOTES:
1. Generate square waves from 0.1 Hz to 14 MHz
2. Arduino Nano, AD9833 Clock Generator, and HY-1602 2-line LCD screen
3. Arduino controls AD9833 Clock Generator
4. LCD screen displays current frequency
5. LED pulses on clock output
6. Input buttons use Arduino internal pull-up resistors
7. 4-Bit interface to HY-1602 LCD screen
8. Arduino on-board LED is heartbeat signal
9. Arduino Nano pins A6 & A7 cannot be used as digital output

The NerdWorld Organisation

Sheet: /

File: Clock Generator.kicad_sch

Title: JRC-65 Computer Clock Generator

Size: USLetter	Date: 2024-04-23	**Rev: New**
KiCad E.D.A. 8.0.1		Id: 1/1