JRC-65 Computer Plan
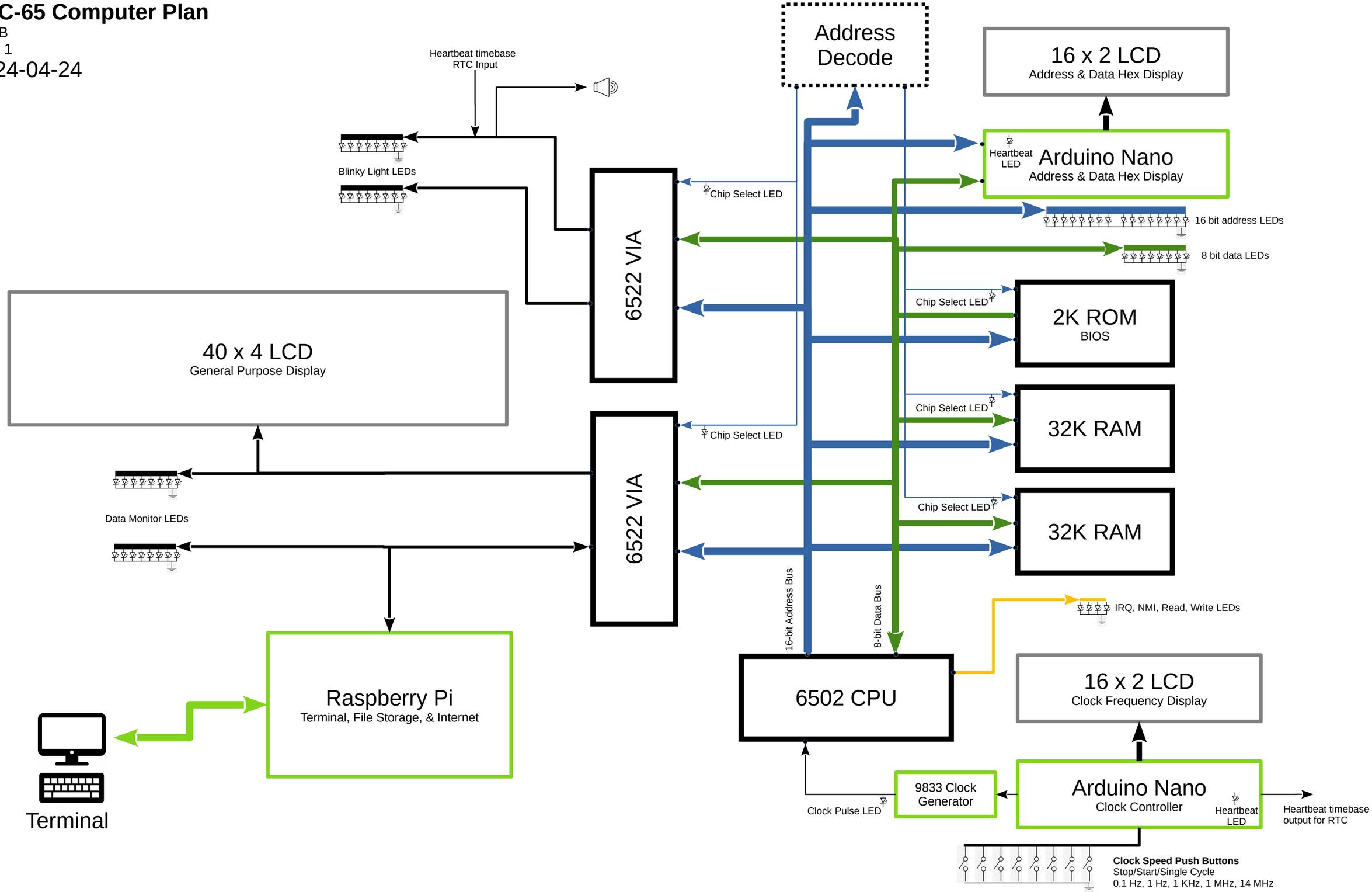
JRCB
Rev: 1
2024-04-24